Cs10 user manual

Ciontek

Smart POS Payment Terminal

User Manual

Disclaimer

We assumes no liability for loss or damages arising directly or indirectly from any misuse of terminal and accessories or non-compliance with the instructions set out in this User Manual. All rights reserved. Specifications and external appearance are subject to change without prior notice.

Product instructions

1 Contactless card reader	2 Printer cover
3 Indicator LED	4 Power Switch
5 Front camera	6 Fingerprint reader
7 Volume	8 Touch screen
9 Magnetic card reader	10 Virtual Key
11 IC card reader	

File Name: Cs10 user manual.pdf
Size: 2436 KB
Type: PDF, ePub, eBook
Category: Book
Uploaded: 18 May 2019, 21:44 PM
Rating: 4.6/5 from 782 votes.

Download Now!

Please check the box below to proceed.

I'm not a robot

reCAPTCHA
Privacy - Terms

Book Descriptions:

Cs10 user manual

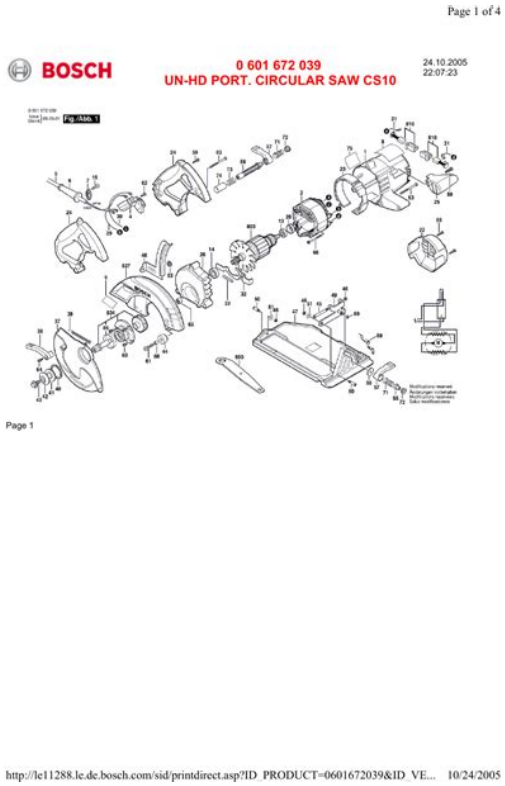

Learn more Learn more Learn more Learn more Learn more Learn more Learn more Learn more Learn more Please visit the ASUS USA and ASUS Canada websites for information about locally available products. Please check with your supplier for exact offers. Products may not be available in all markets. Please refer to specification pages for full details. ASUS participates in several affiliate programs, including the Amazon Associates program, and may receive affiliate fees for qualifying purchases. All rights reserved. Smart POS Payment Terminal Smart POS Payment Terminal. User Manual. Disclaimer. We assumes no liability for loss or damages arising directly or indirectly from any misuse ofAll rights reserved. Specifications and external appearance are subject to change without priorProduct instructionsInstructions for installmentWarning Do not put battery into fire; ensure no battery short circuit of Positive and negativeInstructions. Stop the operation immediately if you notice below phenomenonStop immediately the operation and remove the battery, contact us or distributor at once. Trouble Shooting and advised solution. Fault phenomenon. No display on screen. Elimination methodsCannot read cardRead magnetic card data incorrectlyIC card data read incorrectlyNFC card data read incorrectlyCamera failurePrinter do not workCommunication failureContact us or our distributor when you need toDO NOT disassemble device yourself.Be careful when delivering.Operation is subject to the condition thatAny changes or modifications not expressly approved by the party responsible for complianceNOTE This equipment has been tested and found to comply with the limits for a Class B digitalThese limits are designed to provide reasonableThis equipment generates,However, there is noIf this equipment does cause harmful interference to radio or television reception,This radio device meets the governments requirements for exposure to radio waves.http://sera-forage.com/userfiles/hotpoint-aquarius-washing-machine-wd63-manual.xml

- **leica cs10 user manual, brother cs10 user manual, tk-cs10 user manual, leica viva**

cs10 user manual, cs10 user manual, cs10 user manual pdf, cs10 user manual download, cs10 user manual free, cs10 user manual 2017.

TheThe standards include a substantialThe use of belt clips, holsters and similar accessories should notThe use of accessories that do not satisfy these requirements may not comply with FCC RFPDF Version 1.7. Linearized No. Author Administrator. Has XFA No. Creator Administrator. Title Microsoft Word User manual FCC.docx. Creator Tool PScript5.dll Version 5.2.2. Producer Acrobat Distiller 9.0.0 Windows. Document ID uuidf9c252ce73af4ecfb7a89d2ce3062d4d. Instance ID uuid24d19d056f974591b66068cff194825c. Page Count 5. Cloud Storage A. Sharing by individuals email. 7. B. Share by address book. 7. C. Import email address. 8. D. Include a personal message. 9. E. Share duration setting. 9. F. File update notice. 9A. Change password. 20. B. Email signature setting. 20Click on this icon, a window will pop up for youFor details please see theIf you want to sort all the folders and files in one certain disk, click the disk nameIf you want to sort the files in one certain folder, just double click on the folder name,CS10 allows files to be uploaded to your storage device.When the files beginTo close the window,You have 4 different ways of sharing.A. Sharing by individuals email. After selecting the file or folder you wish to share, click on “Share” from the MainB. Share by address book. After selecting the file or folder you wish to share, click “Share” from the main. Toolbar. From the Share menu, check the box before “Import from my email address. Click on the desired email address. You may select multiple email addresses. If you want toPDF Version 1.5. Linearized Yes. Encryption Standard V4.4 128bit. User Access Print, Extract, Print highres. Author Wesson. Producer Acrobat Distiller 9.4.2 Windows. Creator Tool PScript5.dll Version 5.2.2. Creator Wesson. Document ID uuidf7861f8c3c664e528f5710616c5698b2. Instance ID uuid5d68b04d6869462b98daec560a0777f9. Page Count 25.http://coming-c.com/userfiles/hotpoint-aquarius-washing-machine-wd420-manual.xml

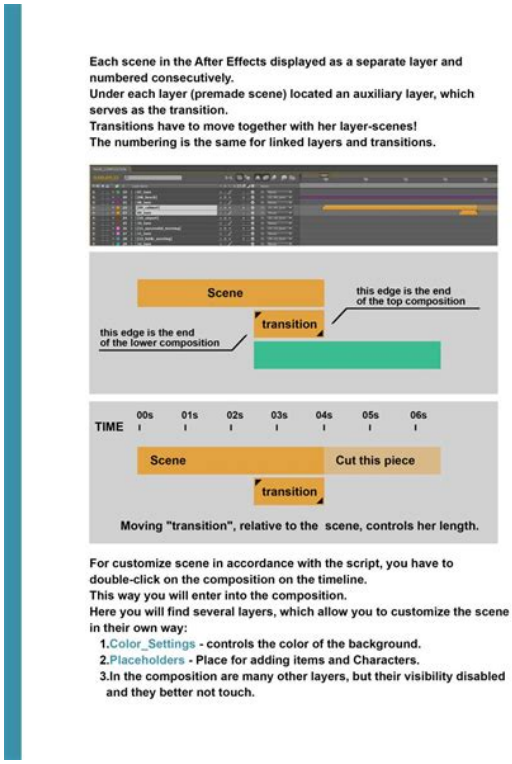

Smart POS Payment Terminal FCCx The guidelines are based on standards that were developed by independent scientific organizations through periodic and thorough evaluation of scientific studies. The standards include a substantial safety margin designed to assure the safety of all persons regardless of age or health. This device was tested for typical bodyworn operations with the back of the handset kept 5mm for body worn. To maintain compliance with FCC RF exposure requirements, use accessories that maintain a 5mm for body worn. The use of belt clips, holsters and similar accessories should not contain metallic components in its assembly. The use of accessories that do not satisfy these requirements may not comply with FCC RF exposure requirements, and should be avoided. FCC ID 2APBPCS10. You can read more about Shipping at Please close this window and retry the purchase. At the same time, the activated carbon,These two features work togetherIt’s also easy toFind the dealer store closest to you by either geolocation or by entering your postcode. You could enjoy FREE delivery for each product purchases, applicable for Malaysia only. Browse our latest selection of Panasonic products range Air Conditioner, Fridge, Washer, TV, Fan, Kitchen Appliances and etc. Discover our attractive offers, purchasewithpurchase deals and premium gifts for our full range of products, including Air Conditioners, Fridges, Washers, Kitchen Appliances, VIERA TVs, LUMIX Cameras and etc. Please read it thoroughly before proceeding. Remember to keep your sales receipt and this manual in a safe place so both are available for future reference.Page 2 INSTALLATION WARNINGS CHOOSING AN ENCLOSUREPage 3 SPECIFICATIONSSensitivity 2.83V, 1m 92dB 91dB. Post your question here in this forum. Were committed to dealing with such abuse according to the laws in your country of residence. When you submit a report, well investigate it and take the appropriate action.

Well get back to you only if we require additional details or have more information to share. Note that email addresses and full names are not considered private information. Please mention this; Therefore, avoid filling in personal details. Please enter your email address. Stay up to date with Roland news, artists, promotions, events, and more. Provides an overview of key features, functions and operational tips. The BOSS Worldwide Social Network keeps you connected to the latest products, exciting events, and much more. Stay up to date with Roland news, artists, promotions, events, and more. Provides an overview of key features, functions and operational tips. The BOSS Worldwide Social Network keeps you connected to the latest products, exciting events, and much more. Try refining your search, or use the navigation above to locate the post. ABOUT 401 Western

Lane, Suite D Irmo, SC 29063 Cadence products offer highperformance premium features at an unbeatable value. All Rights Reserved. A durable magnesium footplate means increased stability and precision accuracy. Weighing in at just 10.3 Lbs., the Bosch CS10 is easy to handle and comfortable to use. An unobstructed view of the cut line means better visibility for more exact cuts. With a soft grip handle for added comfort, and a blower for better dust control, this is one userfriendly tool. The CS10 also features a 56degree bevel capacity, along with positive detents at 22.5 degrees and 45 degrees for working on a wide variety of projects. Call us at 1877BOSCH99 18772672499 or visit the Frequently Asked Questions. We may already have the answer for your questions. Text us here. MonFri 7001900 CST. Sony news in your inbox. Download our apps. Support Support Self Support Contact Support Community Register a Product Sign In Favorites Sony Rewards Electronics Registration Electronics Community Favorites Favorites Search Sony Sony Sites Search Sony To get the full experience on Sony.

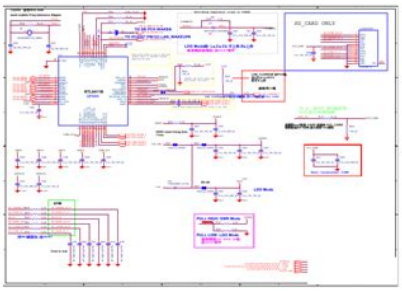

com, please change your settings to allow JavaScript. Download the app today! What is Bluetooth wireless technology. Do products that use magnets affect medical devices such as pacemakers. Important Warning Sony Cylindrical Lithiumion Battery Cells View All We recommend downloading and installing the latest version of one of the following browsers Our site is not optimized for your current browser. A newer version of your browser may be available Chrome Chrome Download the latest version IE Internet Explorer Download the latest version Firefox Firefox Download the latest version Apple Safari Download the latest version Proceed with current browser for now Proceed with current browser for now. Please note that the documents are in PDF In case of nonzipped PDF, and you have slower connection to the Please be advised that some of listed manuals contain only limited information. Hardcopies Alinco, Inc. doesnt retail manuals directly to consumers. Actual engine power and torque are lower and affected by accessories air cleaner, exhaust, charging, cooling, fuel pump, etc., application, engine speed, ambient operating conditions temperature, humidity and altitude and other factors. For more information, contact Kohler Co. Engine Engineering Department. Kohler Co. reserves the right to change product specifications, designs and standard equipment without notice and without incurring obligation. All in one durable, efficient, reliable, little package. Manual, the. This manual applies to the Leica Viva Series. This manual contains. Built for the field Designed for extreme environments, you can alw. To get connected to SmartNet you will need the following A valid SmartNet license A operational data connection SIM, Mifi, etc. Leica Viva TS11 is the most advanced manual total station with imaging and.Viva Series, Introduction. 2. Available documentation. The Leica GS14 is the most compact and powerful GNSS receiver.

http://charlescarteronline.com/images/completo-manual-de-adobe-illustrator-cs4-en-espa-ol-y-gratis.pdf

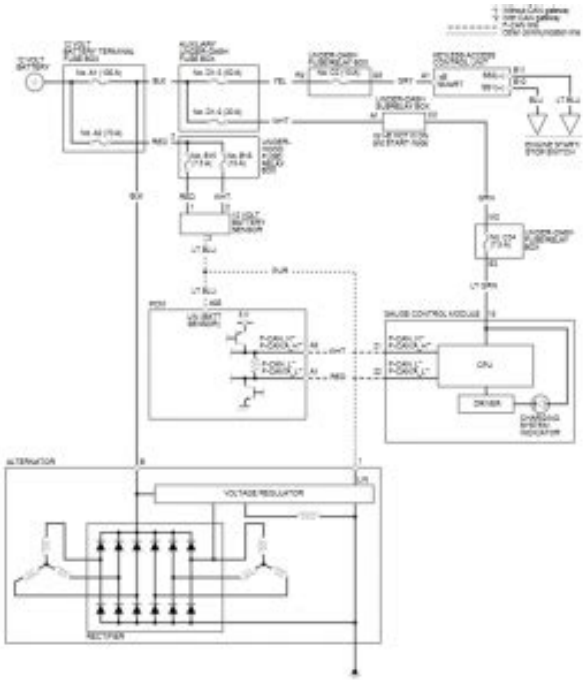

The Leica Geosystems Viva CS10 and CS15 controllers can be connected to an Echosounder by.Reload to refresh your session. Reload to refresh your session. Be sure to check that it is the user manual to exactly the device that you are looking for. In our database JBL CS10 it belongs to the category Speaker. A user manualJBL CS10 is taken from the manufacturer, a JBL company it is an official document, so if you have any doubts as to its contents, please contact the manufacturer of the device JBL CS10 directly. You can view the user manualJBL CS10 directly online or save and store it on your computer.We've organized If you have any questions, you can ask them in the form below. Other users viewing this website will have the opportunity to help you solve your probem with JBL CS10. Remember that you can also share the solution. If you solved the problem yourself, please write the solution to the problem with JBL CS10 you will surely help many users by doing so.Ask a question our users can help you. They are comfortable to hold and easytouse, making them your perfect partner on site. With clear graphics, practical menu structures, understandable terminology and simplified workflows, save time and effort on any site. SmartWorx Viva is incredibly easy to learn and use. You and your field crew will be up to speed in no time. By using our website you consent to all cookies in accordance with our Cookie Policy. By selling it directl y an d cutting out the middleman, we'r e able to eliminate retail markups, all while givin g back to the fishing community. Component names Drag Knob Rotor Bail Spool Stem and Frame Handle Handle Knob Handle Stem Ask your question here. Provide a clear and comprehensive description of the issue and your question. The more detail you provide for your issue and question, the easier it will be for other Cadence CS10 owners to properly answer your question.

http://charlottemarquardt.com/images/complex-analysis-by-dennis-g-zill-manual.pdf

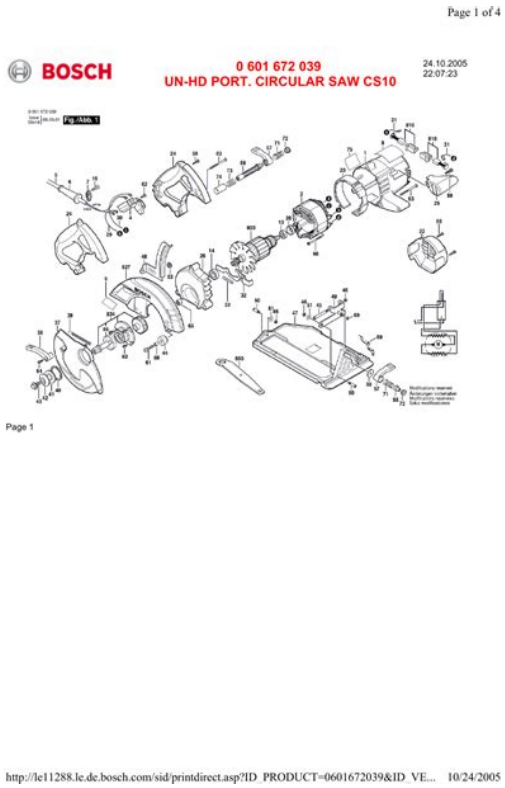

Ask a question This manual comes under the category Fishing reels and has been rated by 1 people with an average of a 9.7. This manual is available in the following languages English. Do you have a question about the Cadence CS10 or do you need help. Ask your question here Cadence CS10 specifications Brand ManualSearcher.com ensures that you will find the manual you are looking for in no time. Our database contains more than 1 million PDF manuals from more than 10,000 brands. Every day we add the latest manuals so that you will always find the product you are looking for. Its very simple just type the brand name and the type of product in the search bar and you can instantly view the manual of your choice online for free. ManualSearcher. com If you continue to use this site we will assume that you are happy with it. Read more Ok. This page requires Javascript. Modify your browsers settings to allow Javascript to execute. See your browsers documentation for specific instructions. Click here Connect with HP support faster, manage all of your devices in one place, view warranty information and more. Learn more Select from the products you own. Thus, the warranty has been removed from this product.Any warranty support needed would be completed by the third party that sold the product.Please use the product number and serial numbers of the new product to validate warranty status.Any warranty support needed would be completed by the reseller that sold the product.It matches the product Please enter a Product Number to complete the request. Learn more about HPs privacy policy This process can take several minutes depending on the number of warranties being checked.We apologize for this inconvenience and are addressing the issue. Please try again shortly. You can open them in your Acrobat Reader for viewing or printing. Or, you can right click on the link and save the file to your computer. If you do not have an Acrobat Reader, please click on the logo below.

Well assume youre ok with this, but you can optout if you wish.Out of these cookies, the cookies that are categorized as necessary are stored on your browser as they are essential for the working of basic functionalities of the website. We also use thirdparty cookies that help us analyze and understand how you use this website. These cookies will be stored in your browser only with your consent. You also have the option to optout of these cookies. But opting out of some of these cookies may have an effect on your browsing experience. This category only includes cookies that ensures basic functionalities and security features of the website. These cookies do not store any personal information. It is mandatory to procure user consent prior to running these cookies on your website.

Service manuals usually include printed circuit boards, block diagrams, exploded views, assembly instructions and parts catalog. Its invaluable source of information for everyone looking to repair their unit. You should look for Owners Manual. After placing order well send You download instructions on Your email address. Discover everything Scribd has to offer, including books and audiobooks from major publishers. Start Free Trial Cancel anytime. Report this Document Download Now Save Save Leica Viva CS10 CS15 User Manual For Later 100% 1 100% found this document useful 1 vote 340 views 156 pages Leica Viva CS10 CS15 User Manual Uploaded by Nayrb AtebAlobien Description manejo de gps Full description Save Save Leica Viva CS10 CS15 User Manual For Later 100% 100% found this document useful, Mark this document as useful 0% 0% found this document not useful, Mark this document as not useful Embed Share Print Download Now Jump to Page You are on page 1 of 156 Search inside document Browse Books Site Directory Site Language English Change Language English Change Language. The legitimation of the treatment is carried out through the consent of the interested party.

http://www.airportlimofortlauderdale.net/wp-content/plugins/formcraft/file-upload/server/content/files/1628804b2b84b8---camaro-manual-transmission-swap.pdf

Failure to enter your personal data will make it impossible to meet your request.The legitimation of the treatment is carried out through the consent of the interested party. Failure to enter your personal data will make it impossible to meet your request.Find out more or adjust your settings. Cookie information is stored in your browser and performs functions such as recognising you when you return to our website and helping our team to understand which sections of the website you find most interesting and useful. Manual and User Guide for many equipments like mobile phones, photo cameras, motherboard, monitors, software, tv, dvd, and others. Manual and User Guide for many equipments like mobile phones, photo cameras, motherboard, monitors, software, tv, dvd, and others. Utilizing Adamson’s proprietary network platform, the CS10 employs a redundant MILAN scheme with the ability to daisychain networked audio between multiple sources, an analog XLR input and output, as well as onboard DSP and amplification. All features of the loudspeaker are controlled and monitored through Adamson’s proprietary CS software. Patented Controlled Summation Technology further eliminates lowmid lobing normally associated with 2way line source systems. You may have to register before you can post click the register link above to proceed. To start viewing messages, select the forum that you want to visit from the selection below. Now you can huddle happy in smaller rooms and connect easy in conference rooms whatever video collaboration software you use Brilliant audio without interruptions. And the Trio C60 plays nicely with everyone, delivering native experiences on your favorite collaboration platforms. Give your workers the headset that will help them get more done, with stylemeets comfort. Inscrevase para ouvir as ultimas noticias da Poly.

www.fuelignitethrive.com/files/canon-fax-710-user-manual.pdf

Now you can huddle happy in smaller rooms and connect easy in conference rooms whatever video collaboration software you use Brilliant audio without interruptions. And the Trio C60 plays nicely with everyone, delivering native experiences on your favorite collaboration platforms. Give your workers the headset that will help them get more done, with stylemeets comfort. Inscrevase para ouvir as ultimas noticias da Poly. Ripple and Noise Voltage 50mVpp Overview Show Size WxHxD 60mm x 124mm x 117mm Weight per Piece excluding packing 700g Operat.Here you can find the right contact person for your region.